ATHLON

RIDICULOUSLY GOOD OPTICS

TALOS HMR RIFLESCOPE

SECOND FOCAL PLANE

USER MANUAL
& CARE INSTRUCTIONS

Table of Contents

1) Mounting Your Athlon Riflescope

a) Scope Dimensions
b) Focusing the Scope
c) Adjustment for Maximum Eye Relief
d) Bore Sighting
e) Zeroing the Scope
f) Base Adjustment

2) Reticles

3) Maintaining Your Riflescope

4) Trouble Shooting Tips

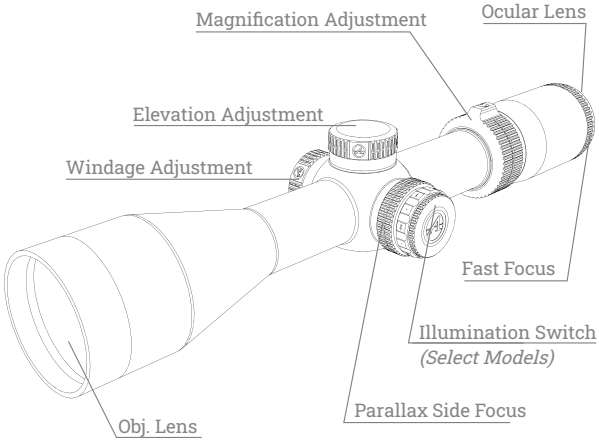

Congratulations on purchasing an Athlon Riflescope. Athlon is the ancient Greek word for "Prize" or "Medal." We think that with the purchase of your Athlon product you have won the best "prize" on the market today. Great Quality while still being a great value.

1. MOUNTING YOUR ATHLON RIFLESCOPE

CAUTION: BEFORE MOUNTING A RIFLESCOPE BE SURE THAT THE FIREARM IS NOT LOADED, HAS ACTION OPEN AND THE MUZZLE POINTING IN A SAFE DIRECTION. SAFE FIREARM HANDLING PROCEDURES NEED TO BE PRACTICED AT ALL TIMES.

To achieve the best performance from your rifle and your Athlon Scope, your scope must be mounted properly. If you are unfamiliar with proper procedures to mount a scope, we highly recommend to have the scope mounted by a qualified gunsmith

Athlon recommends you use high quality, appropriately sized rings and bases matched to your rifle when mounting your scope on the rifle. Please note that most ballistic charts use 1.5" as the standard mounting height for scopes when publishing ammunition information. Higher mounting height will have an effect on the impact point of the bullet. Mount your scope as low as you can without it touching the rifle or impeding the operation of the action of the gun. Attach bases and the bottom of the rings to your rifle. Be sure to follow the manufacturer instructions supplied with the rings and mounting base.

a) SCOPE DIMENSIONS

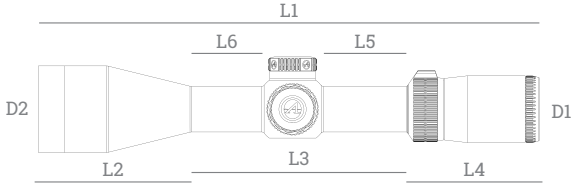

RIFLESCOPE MODEL	L1	L2	L3	L4	L5	L6	D1	D2
3-12x50 SFP	13.2"	4.4"	5"	3.8"	1.9"	1.7"	1.7"	2.3"
4-16x56 SFP	14.2"	4.7"	5.5"	3.9"	2.2"	1.9"	1.7"	2.5"
6-24x50 SFP	14.5"	4.6"	5.9"	3.9"	2.3"	2.3"	1.7"	2.3"

b) FOCUSING THE SCOPE

The purpose of the Fast Focus eyepiece is to focus the reticle in the scope to your eyes. For a fast focus eyepiece, just simply rotate the fast focus ring at the end of the eyepiece in either direction to get a perfect clear reticle while looking through the scope pointing at a flat plane surface. This is important to do prior to mounting.

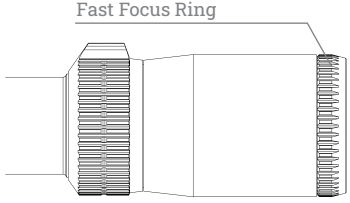

c) ADJUST FOR MAXIMUM EYE RELIEF

i. You need to adjust the scope for maximum eye relief before tightening of the scope rings, to avoid injury from recoil.

ii. With the scope on lowest magnification, move the scope forward as far as possible in the rings.

iii. With the rifle in normal shooting position, look through the scope and slowly slide the scope back towards you. When you finally see the full field of view with sharp and clear edges, stop. Make sure the scope has not rotated so the reticle is tilted.

iv. Rotate the scope until the elevation dial is at the top of the scope and the vertical cross-hair of the reticle matches the vertical axis of the rifle. This will be easier if you find a vertical reference such as the straight edge of a building or a telephone pole. Make sure the scope has not moved forward or backward while doing this.

v. Tighten the rings per the manufacturer's instructions.

d) BORE SIGHTING

Bore sighting is a preliminary procedure to achieve proper alignment of the scope with the rifle's bore.

i. The initial bore sighting of the scope can be at short range of 50 yards. This is easier than trying to bore sight at 100 yards and will get you on the paper at that distance, so to save time and money at the shooting range. We highly recommend using a bore sighter, but make sure to follow the manufacturer's instructions.

ii. This can also be done by removing the bolt and sighting through the rear of the action. Make sure the rifle is placed solidly on a bench and the bolt is removed. You can then sight through the action and center the bore and target inside the barrel. (Note: Many ring and base sets have some kind of windage adjustments. Use these external adjustments first before using the scopes internal windage adjustments). With target centered in the bore, make windage and elevation adjustments until the reticle crosshair is also centered over the bulls eye.

e) ZEROING THE SCOPE

IF A LASER BORE SIGHTING OR ANY OTHER SIMILAR DEVICE INSIDE THE BORE WAS USED, IT MUST BE REMOVED BEFORE FIRING. AN OBSTRUCTED BORE CAN CAUSE SERIOUS DAMAGE TO THE GUN AND POSSIBLE INJURY TO THE SHOOTER.

i. Ideally set the rifle on a two or three holding point gun rest, and then fire three rounds at a target 100 yards away. Observe the bullet holes on the target and calculate how far those bullet holes are off the center of the target, and then adjust windage and elevation knobs to move the center of the reticle up, down, left or right. Fire another three rounds, then observe and adjust. Repeat this step as necessary until the three round bullet holes are perfectly aligned with the center of the target.

ii. Setting Windage and Elevation

Athlon Talos HMR scopes have capped windage and elevation turret knobs. Once a rifle has been sighted in, remove the cap and take the inner knob out after unscrewing the top screw of it. Put the inner knob back on with zero line aligned with the vertical mark below the turning knob, then tighten the screws to lock it in. Repeat the same steps for the windage knob. By zeroing the rifle at 100 yards, the shooter can calculate how many clicks of adjustment are needed for different distances or wind conditions.

Capped Resettable to Zero Elevation Turret Knob
(Same Design for Windage Turret Knob)

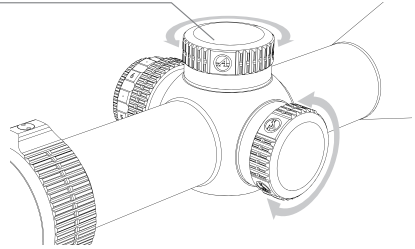

Athlon Talos HMR scopes have several options available, 1/4 MOA, and 1/10 MIL for the click values of elevation and windage adjustment depending on different configurations of scopes and reticle selections. MOA, a unit of angular measurement, is defined as a minute of angle, a minute is 1/60th of one degree and 1/21600th of a circle. One MOA equals 1.047-inch (rounded down to one inch) at 100 yards, two inches at 200 yards and to ten inches at 1000 yards. 1/4 MOA per click takes four clicks to move point of impact one inch at 100 yards. MIL, which is short for Milliradian and another unit of angular measurement, is defined as 1/1000th of a radian (6.2832 radians in a circle) and 1 MIL equals to 3.438 moa and 3.6 inches at 100 yards, 7.2 inches

at 200 yards, and to 36 inches at 1000 yards. 1/10 MIL per click takes 10 clicks to move point of impact 3.6 inches at 100 yards. Knowing the click value and the number of clicks needed for different distance is critical to dial in elevation and windage adjustments based on the rifle ballistics and wind velocity.

f) BASE ADJUSTMENT

Athlon riflescope reticle comes centered from the factory. If you need to make additional adjustments when initially sighting in your scope, many ring and base setups allow you to adjust windage at the base mount. If possible, use these adjustments for initial windage change. Though not usually necessary, you can correct the elevation adjustment by replacing the mounting base with an offset 20+ MOA scope rail.

2. RETICLES

The reticles in your Athlon Talos HMR riflescope are second focal plane (SFP). This is according to where the reticle is located within the riflescope.

Second focal plane (SFP) reticles are located near the eyepiece behind the image erecting and magnifying lenses. This style of reticle does not visually change in size when you change the magnification. The advantage of an SFP reticle is that it always maintains the same ideal visual appearance. If your reticle style has subtentions that help you determine where to aim depending on distance from target and windage, it will have been engineered for only one particular magnification.

ILLUMINATION

On the select Athlon Talos HMR riflescopes models that have illuminated reticles, there are variable brightness settings. The numbers on the illumination switch (see page 2) indicate different brightness settings. The illumination is powered by a lithium CR2032 3V battery. Remove the battery chamber cap by turning it counter-clockwise and then set the battery with the positive (+) side facing up. Reinstall the cap by turning it clockwise, DO NOT OVER-TIGHTEN.

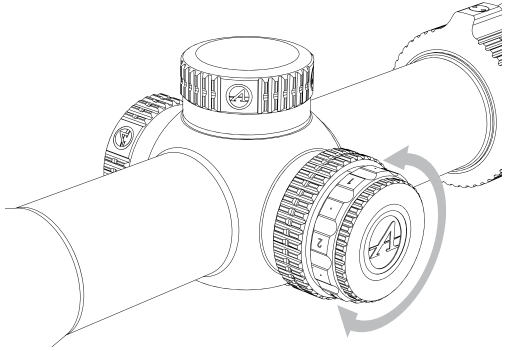

Please see the following reticle subtensions and find more details from reticle instruction manual to fully utilize the features and maximize the performance of the reticle design. You can download the reticle instruction manual from the product specifications tag of the product page on: **www.athlonoptics.com**

CENTER X

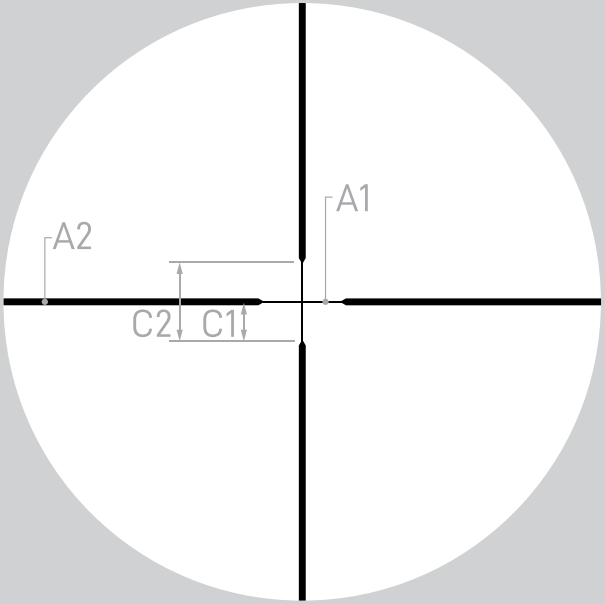

SUBTENSIONS IN MOA

A1	A2
0.18	0.7
C1	**C2**
4.5	9

AHMR IR

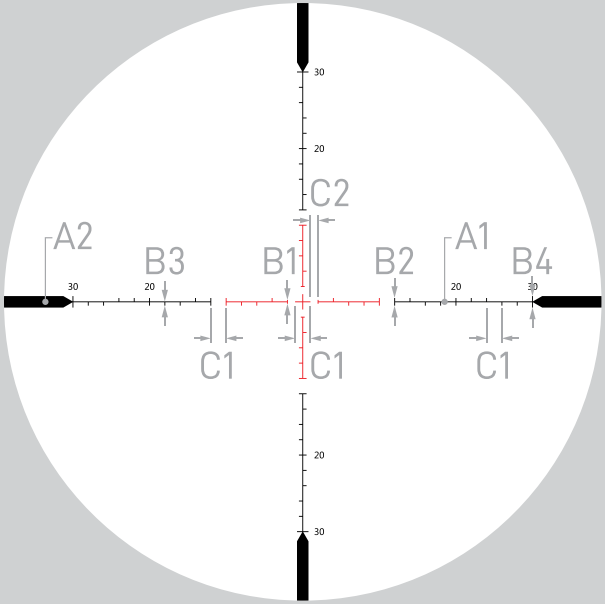

SUBTENSIONS IN MOA

A1	A2	B1	B2
0.12	1.5	0.5	1
B3	**B4**	**C1**	**C2**
0.5	1.5	2	1

AHMC IR

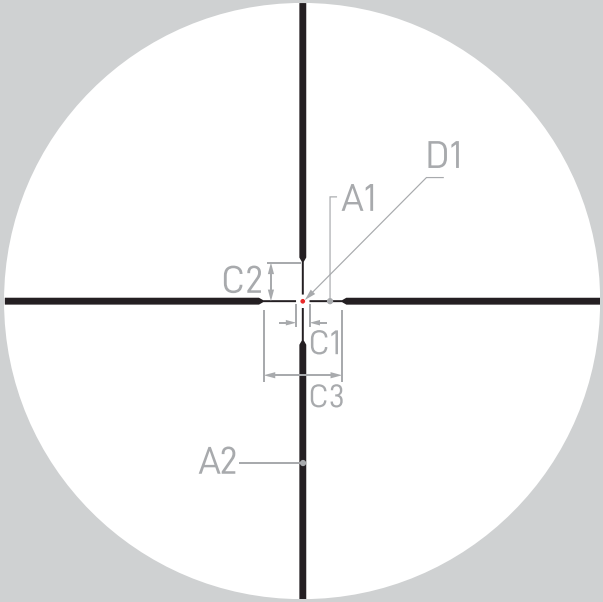

SUBTENSIONS IN MOA

A1	A2	C1
0.25	0.9	2
C2	**C3**	**D1**
6.5	13	0.7

BDC 600 IR

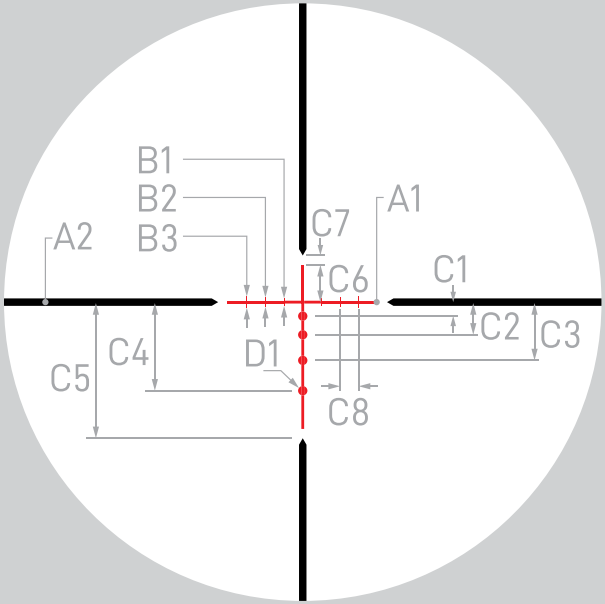

SUBTENSIONS IN MOA

A1	A2	B1	B2	B3	C1	C2
0.3	0.8	0.8	1	1.2	1.5	3.5
C3	**C4**	**C5**	**C6**	**C7**	**C8**	**D1**
6.25	9.5	13.6	4	1	2	1

APLR-H2 IR

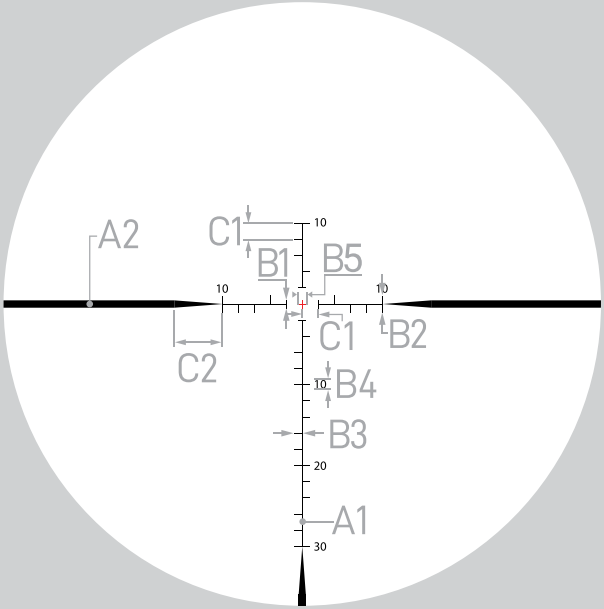

SUBTENSIONS IN MOA

A1	A2	B1	B2	B3
0.12	0.9	1	2	1
B4	**B5**	**C1**	**C2**	
1	1	2	6	

Valid @ 16x

APRS-H2 IR

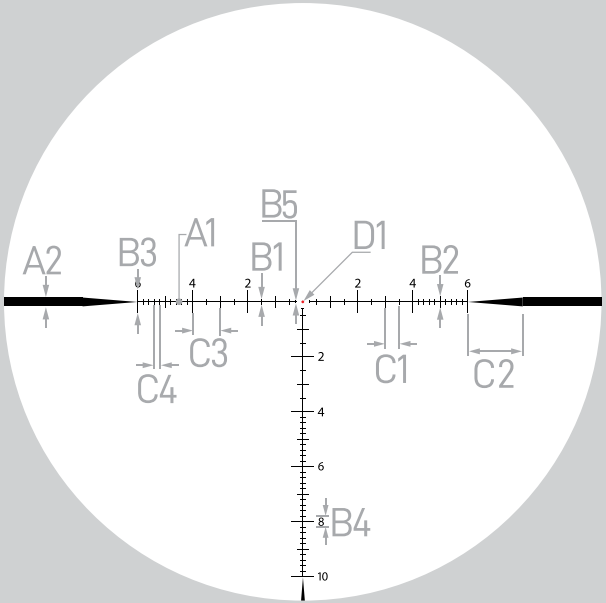

SUBTENSIONS IN MIL

A1	A2	B1	B2	B3	B4
0.03	0.3	0.2	0.4	0.8	0.3
B5	**C1**	**C2**	**C3**	**C4**	**D1**
0.1	0.5	2	1	0.2	0.1

Valid @ 16x

3. MAINTAINING YOUR RIFLESCOPE

Disassembling or cleaning the scope internally will void the warranty. If the scope requires repairs, please refer to the warranty section for complete instructions.

The external optical surfaces should occasionally be wiped clean. Use the provided lens cloth or optical-quality lens paper to remove dust or dirt. Remove large particles or heavy dirt with a soft brush or by blowing them away. Apply lens cleaning liquid before wiping. Keep the protective lens covers in place when the scope is not in use to prevent dust buildup. Store in a low-humidity environment.

4. TROUBLE SHOOTING TIPS - INACCURACY ISSUES

i. Check scope mounting for movement by pulling the scope by hand. Tighten the mounts if movement is observed.

ii. Use a benchrest or bags to support the rifle stock. Do not use supports on the barrel when making windage and elevation adjustments to help eliminate movement.

iii. Use the same type and weight of ammunition.

iv. Check your rifle stock, as a loose stock changes the point of impact.

v. Make sure your rifle chamber and barrel are clean.

vi. Make sure the barrel rifling is undamaged and there is no excessive grease inside the barrel.

vii. For technical questions, please contact Athlon Optics: **contact@athlonoptics.com** or toll free **1-855-913-5678**.

THE ATHLON GOLD MEDAL LIFETIME WARRANTY*

Demand the most from your equipment. When things go unexpectedly or accidents happen, rest assured, Athlon Optics carry a lifetime transferable warranty. Athlon guarantees to repair or replace your product if damaged through normal use. No charge; No receipt; No Registration required.

This warranty does not cover damages caused by deliberate damage, misuse, theft or maintenance provided by someone other than the Athlon Authorized Service Department.

This warranty does not cover any optional accessories offered in the package; including sunshade, lens cap, and throw lever.

⚠WARNING

•**INGESTION HAZARD:** THIS PRODUCT CONTAINS A BUTTON CELL OR COIN BATTERY. •**DEATH** OR SERIOUS INJURY CAN OCCUR IF INGESTED.
•A SWALLOWED BUTTON CELL OR COIN BATTERY CAN CAUSE **INTERNAL CHEMICAL BURNS** IN AS LITTLE AS **2 HOURS.** •**KEEP** NEW AND USED BATTERIES **OUT OF REACH OF CHILDREN.** •**SEEK IMMEDIATE MEDICAL ATTENTION** IF A BATTERY IS SUSPECTED TO BE SWALLOWED OR INSERTED INSIDE ANY PART OF THE BODY. FOR TREATMENT INFORMATION CALL: **1-800-498-8666. BATTERY TYPE: CR2032.** NOMINAL VOLTAGE: 3.0V 10MAH.

⚠WARNING

REMOVE AND IMMEDIATELY RECYCLE OR DISPOSE OF USED BATTERIES ACCORDING TO LOCAL REGULATIONS AND KEEP AWAY FROM CHILDREN. **DO NOT** DISPOSE OF BATTERIES IN HOUSEHOLD TRASH OR INCINERATE. EVEN USED BATTERIES MAY CAUSE **SEVERE INJURY OR DEATH.**

CALL A LOCAL POISON CONTROL CENTER FOR TREATMENT INFORMATION. NON-RECHARGEABLE BATTERIES ARE NOT TO BE RECHARGED. **DO NOT** FORCE DISCHARGE, RECHARGE, DISASSEMBLE, HEAT ABOVE 160˚F OR INCINERATE. DOING SO MAY RESULT IN INJURY DUE TO VENTING, LEAKAGE OR EXPLOSION RESULTING IN CHEMICAL BURNS. DO NOT COOL BELOW -40˚F. ENSURE THE BATTERIES ARE INSTALLED CORRECTLY ACCORDING TO POLARITY (+ AND -). REMOVE AND IMMEDIATELY RECYCLE OR DISPOSE OF BATTERIES FROM EQUIPMENT NOT USED FOR AN EXTENDED PERIOD OF TIME ACCORDING TO LOCAL REGULATIONS.

ALWAYS COMPLETELY SECURE THE BATTERY COMPARTMENT. IF THE BATTERY COMPARTMENT DOES NOT CLOSE SECURELY, STOP USING THE PRODUCT, REMOVE THE BATTERIES, AND KEEP THEM AWAY FROM CHILDREN.

SHARP, TIGHT AND PRICED JUST RIGHT!

Toll free: 1-855-913-5678

contact@athlonoptics.com

10817 RENNER BLVD,
LENEXA, KS 66219

ATHLONOPTICS.COM